PWR SERIES

PULSE WITHSTANDING CHIP RESISTOR

RoHS

SCOPE

- This specification applies to 0603--2512 sizes of rectangular-type fixed chip resistor with RuO_2 paste as material

FEATURES

- Tolerance from ±0.5%~5%
- High power rating
- Excellent pulse withstanding performance
- Improved working voltage ratings
- Standard package sizes of 0603-2512

APPLICATIONS

- Metering (testing/measurement)
- Diagnostic equipment
- Medical devices
- Industrial controls
- Plasma
- LCD video monitors

CONSTRUCTION

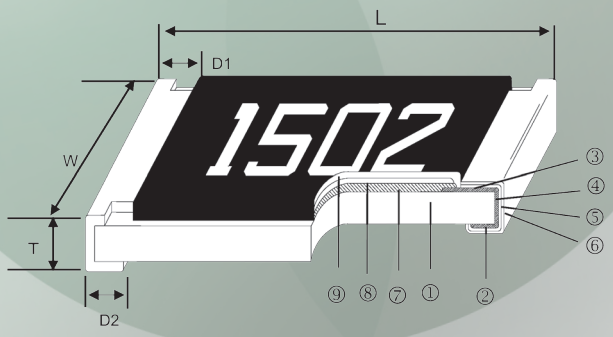

① Alumina Substrate	④ Edge Electrode (NiCr)	⑦ Resistor Layer (RuO_2/Ag)
② Bottom Electrode(Ag)	⑤ Barrier Layer (Ni)	⑧ Primary Overcoat (Glass)
③ Top Electrode (Ag-Pd)	⑥ External Electrode (Sn)	⑨ Secondary Overcoat (Epoxy)

RoHS

DIMENSIONS

Unit: mm

Type	Size (Inch)	L (mm)	W (mm)	T (mm)	D1 (mm)	D2 (mm)	Weight (g) (1000pcs)
PWR03	0603	1.60±0.10	0.80±0.10	0.45±0.10	0.30±0.20	0.30±0.20	2.042
PWR05	0805	2.00±0.10	1.25±0.10	0.50±0.10	0.35±0.20	0.40±0.20	4.368
PWR06	1206	3.10±0.10	1.55±0.10	0.55±0.10	0.50±0.25	0.50±0.20	8.947
PWR10	1210	3.10±0.10	2.60±0.50	0.55±0.10	0.50±0.25	0.50±0.20	15.959
PWR20	2010	5.00±0.10	2.50±0.15	0.55±0.10	0.60±0.25	0.50±0.20	24.241
PWR25	2512	6.35±0.10	3.10±0.15	0.55±0.10	0.60±0.25	0.50±0.20	39.448

RECOMMEND LAND PATTERN

Type	A	B	C
PWR03	0.90	0.60	0.90
PWR05	1.20	0.70	1.30
PWR06	2.00	0.90	1.60
PWR10	2.00	0.90	2.80
PWR20	3.80	0.90	2.80
PWR25	3.80	1.60	3.50

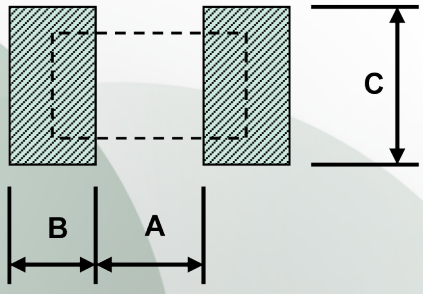

DERATING CURVE

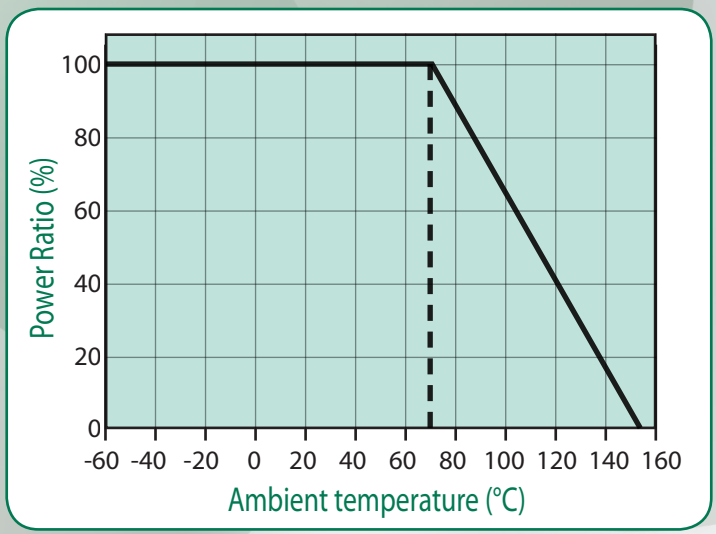

RoHS

REFLOW

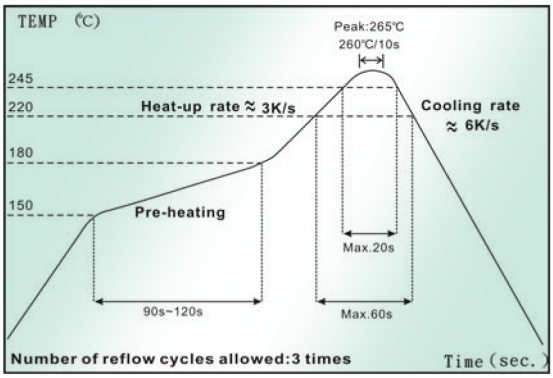

STANDARD ELECTRICAL SPECIFICATIONS

ITEM / TYPE	POWER RATING AT 70°C	OPERATING TEMPERATURE RANGE	MAX. OPERATING VOLTAGE	RESISTANCE RANGE			TCR (PPM/°C)
				±0.5%	±1%	±5%	
PWR03 (0603)	0,1W	-55 ~ +155°C	50V	10Ω-299Ω	1Ω-299Ω		±200
				300Ω-1MΩ			±100
PWR05 (0805)	0,125W	-55 ~ +155°C	150V	10Ω-299Ω	1Ω-299Ω		±200
				300Ω-20MΩ			±100
PWR06 (1206)	0,33W	-55 ~ +155°C	200V	10Ω-20Ω	1Ω-20Ω		±200
				20.1Ω-20MΩ			±100
PWR10 (1210)	0,5W	-55 ~ +155°C	200V	10Ω-20Ω	1Ω-20Ω		±200
				20.1Ω-20MΩ			±100
PWR20 (2010)	0,75W	-55 ~ +155°C	400V	10Ω-20Ω	1Ω-20Ω		±200
				20.1Ω-20MΩ			±100
PWR25 (2512)	1,5W	-55 ~ +155°C	500V	10Ω-20Ω	1Ω-20Ω		±200
				20.1Ω-20MΩ			±100

RoHS

HIGH POWER RATING ELECTRICAL SPECIFICATIONS

ITEM / TYPE	POWER RATING AT 70°C	OPERATING TEMPERATURE RANGE	MAX. OPERATING VOLTAGE	RESISTANCE RANGE			TCR (PPM/°C)
				±0.5%	±1%	±5%	
PWR03 (0603)	1/8W	-55 ~ +155°C	50V	10Ω-299Ω	1Ω-299Ω		±200
	1/5W			300Ω-1MΩ			±100
PWR05 (0805)	1/4W	-55 ~ +155°C	150V	10Ω-299Ω	1Ω-299Ω		±200
				300Ω-20MΩ			±100
PWR06 (1206)	1/2W	-55 ~ +155°C	200V	10Ω-20Ω	1Ω-20Ω		±200
				20.1Ω-20MΩ			±100
PWR20 (2010)	1W	-55 ~ +155°C	400V	10Ω-20Ω	1Ω-20Ω		±200
				20.1Ω-20MΩ			±100

Operating Voltage = $\sqrt{(P*R)}$ or Max. Operating Voltage listed above, whichever is lower.
Overload Voltage = $2.5*\sqrt{(P*R)}$ or Max. Overload Voltage listed above, whichever is lower.

RoHS

ENVIRONMENTAL CHARACTERISTICS

ITEM	REQUIREMENT	TEST METHOD
Temperature Coefficient of Resistance (T.C.R.)	As Spec.	JIS-C-5201-1 4.8 IEC-60115-1 4.8 -55°C~+125°C, 25°C is the reference temperature
Short Time Overload	±(1.0%+0.05Ω)	JIS-C-5201-1 4.13 IEC-60115-1 4.13 2.5 times RCWV or Max. Overload Voltage for 5 seconds
Insulation Resistance	>10GΩ	JIS-C-5201-1 4.6 IEC-60115-1 4.6 Max. Overload Voltage for 1 minute
Endurance	±(1.0%+0.05Ω)	JIS-C-5201-1 4.25 IEC-60115-1 4.25.1 70±2°C, RCWV for 1000 hrs with 1.5 hrs "ON" and 0.5 hr "OFF
Damp Heat with Load	±(0.05%+0.05Ω)	JIS-C-5201-1 4.24 40±2°C, 90~95% R.H., Max. Working Voltage for 1000 hrs with 1.5 hrs "ON" and 0.5 hr "OFF"
Dry Heat	±(0.05%+0.05Ω)	JIS-C-5201-1 4.23.2 IEC-60115-1 2.23.2 at +155°C for 1000 hrs
Bending Strength	±(1.0%+0.05Ω)	JIS-C-5201-1 4.33 IEC-60115-1 4.33 Bending once for 5 seconds with 3mm 2010, 2512 sizes: 2mm
Solderability	95% min. coverage	JIS-C-5201-1 4.17 IEC-60115-1 4.17 245±5°C for 3 seconds
Resistance to Soldering Heat	±(0.05%+0.05Ω)	JIS-C-5201-1 4.18 IEC-60115-1 4.18 260±5°C for 10 seconds
Dielectric Withstand Voltage	By type	MIL-STD-202F Method 301 Max Overload Voltage for 1 minute
Voltage Proof	No breakdown or flashover	JIS-C-5201-1 4.7 IEC-60115-1 4.7 1.42 times RCWV (RMS) for 1 minute
Leaching	Individual leaching area ≤5% Total leaching area ≤ 10%	JIS-C-5201-1 4.18 IEC-60068-2-58 8.2.1 260±5°C for 30 seconds
Rapid Change of Temperature	±(0.5%+0.05Ω)	JIS-C-5201-1 4.19 IEC-60115-1 4.19 -55°C to +155°C, 5 cycles

Storage Temperature: 25±3°C; Humidity < 80%RH

RoHS

PACKAGING

Reel Specifications & Packaging Quantity

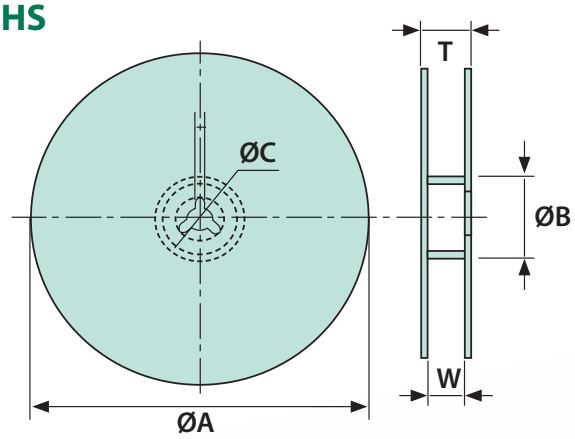

Type	Packaging Quantity		Tape Width	ØA (mm)	ØB (mm)	ØC (mm)	W (mm)	T (mm)
PWR03 PWR05 PWR06 PWR10	Paper	5K	8mm	178.5±1.5	60+1/-0	13.0±0.2	9.0±0.5	12.5±0.5
		10K	8mm	254±1.0	100±0.5	13.0±0.2	9.5±0.5	13.5±0.5
		20K	8mm	330±1.0	100±0.5	13.0±0.2	9.5±0.5	13.5±0.5
PWR20	Embossed	4K	12mm	178.5±1.5	60+1/-0	13.0±0.5	13.0±0.5	15.5±0.5
PWR25		8K	12mm	250±1.0	62±0.5	13.0±0.5	12.5±0.5	16.5±0.5

Paper Tape Specifications

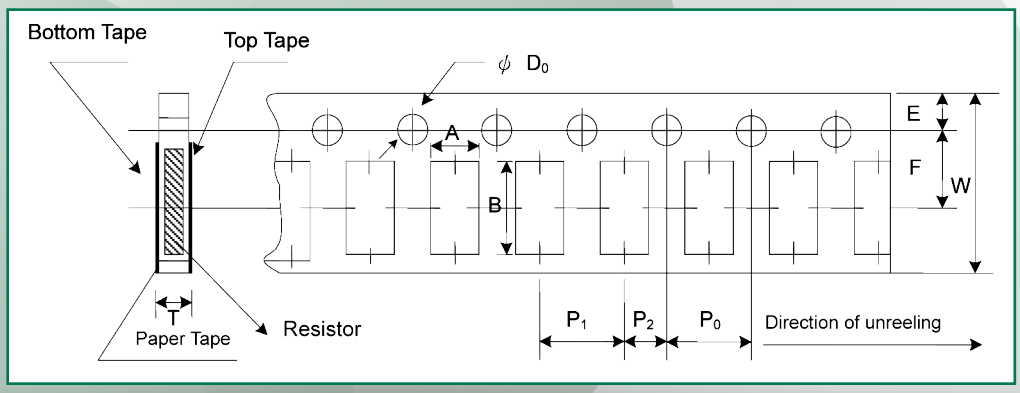

Type	A (mm)	B (mm)	W (mm)	E (mm)	F (mm)	P_0 (mm)	P_1 (mm)	P_2 (mm)	$ØD_0$ (mm)	T (mm)
PWR03	1.10±0.10	1.90±0.10	8.0±0.20	1.75±0.10	3.50±0.05	4.00±0.10	4.00±0.05	2.00±0.05	1.50+0.1,-0	0.70±0.10
PWR05	1.60±0.10	2.40±0.20	8.0±0.20	1.75±0.10	3.50±0.05	4.00±0.10	4.00±0.05	2.00±0.05	1.50+0.1,-0	0.85±0.10
PWR06	1.90±0.10	3.50±0.20	8.0±0.20	1.75±0.10	3.50±0.05	4.00±0.10	4.00±0.05	2.00±0.05	1.50+0.1,-0	0.85±0.10
PWR10	2.90±0.10	3.50±0.20	8.0±0.20	1.75±0.10	3.50±0.05	4.00±0.10	4.00±0.05	2.00±0.05	1.50+0.1,-0	0.85±0.10

RoHS

Embossed Plastic Tape Specifications

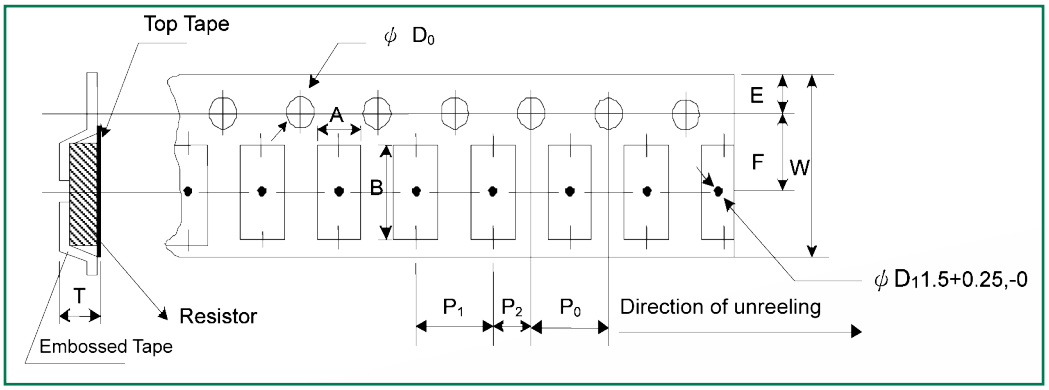

Type	A (mm)	B (mm)	W (mm)	E (mm)	F (mm)	P_0 (mm)	P_1 (mm)	P_2 (mm)	$ØD_0$ (mm)	T (mm)
PWR20	2.8±0.10	5.5±0.10	12.0±0.30	1.75±0.10	5.5±0.05	4.00±0.10	4.00±0.10	2.00±0.05	1.50+0.1, -0	1.2+0
PWR25	3.5±0.10	6.7±0.10	12.0±0.30	1.75±0.10	5.5±0.05	4.00±0.10	4.00±0.10	2.00±0.05	1.50+0.1, -0	1.2+0

MARKING

0805-2512: 4 digits marking for example

Resistance	100Ω	2.2KΩ	10KΩ	49.4KΩ	100KΩ
Marking	1000	2201	1002	4942	1003

3 digits marking in E24

Example: 101=100Ω 102=1KΩ (1st and 2nd are E24 code and 3rd code is multiplier)

E24 code	10	11	12	13	15	16	18	20	22	24	27	30	33	36	39	43	47	51	56	62	68	75	82	91

RoHS

1% for 0603: 3 digits marking in E96(E96 series except E24 series)

MARKING TABLE

Code	E96	Code	E96	Code	E96	Code	E96
02	102	28	191	52	340	75	590
03	105	29	196	53	348	76	604
04	107	31	205	54	357	77	619
06	113	32	210	55	365	78	634
07	115	33	215	56	374	79	649
08	118	34	221	57	383	80	665
09	121	35	226	58	392	81	681
10	124	36	232	59	402	82	698
11	127	37	237	60	412	83	715
13	133	38	243	61	422	84	732
14	137	39	249	62	432	86	768
15	140	40	255	63	442	87	787
16	143	41	261	64	453	88	806
17	147	42	267	65	464	89	825
19	154	43	274	66	475	90	845
20	158	44	280	67	487	91	866
21	162	45	287	68	499	92	887
22	165	46	294	69	511	93	909
23	169	47	301	70	523	94	931
24	174	48	309	71	536	95	953
25	178	49	316	72	549	96	976
26	182	50	324	73	562		
27	187	51	332	74	576		

Code	A	B	C	D	E	F	G	X	Y		
Multiplier	10^0	10^1	10^2	10^3	10^4	10^5	10^6	10^{-1}	10^{-2}		

RoHS

LIGHTNING SURGE

Resistors are tested in accordance with IEC 60 115-1 using both 1.2/50us and 10/700 pulse shapes. The limit of acceptance is a shift in resistance of less than 1% from the initial value

10/700 us Lightning Surge

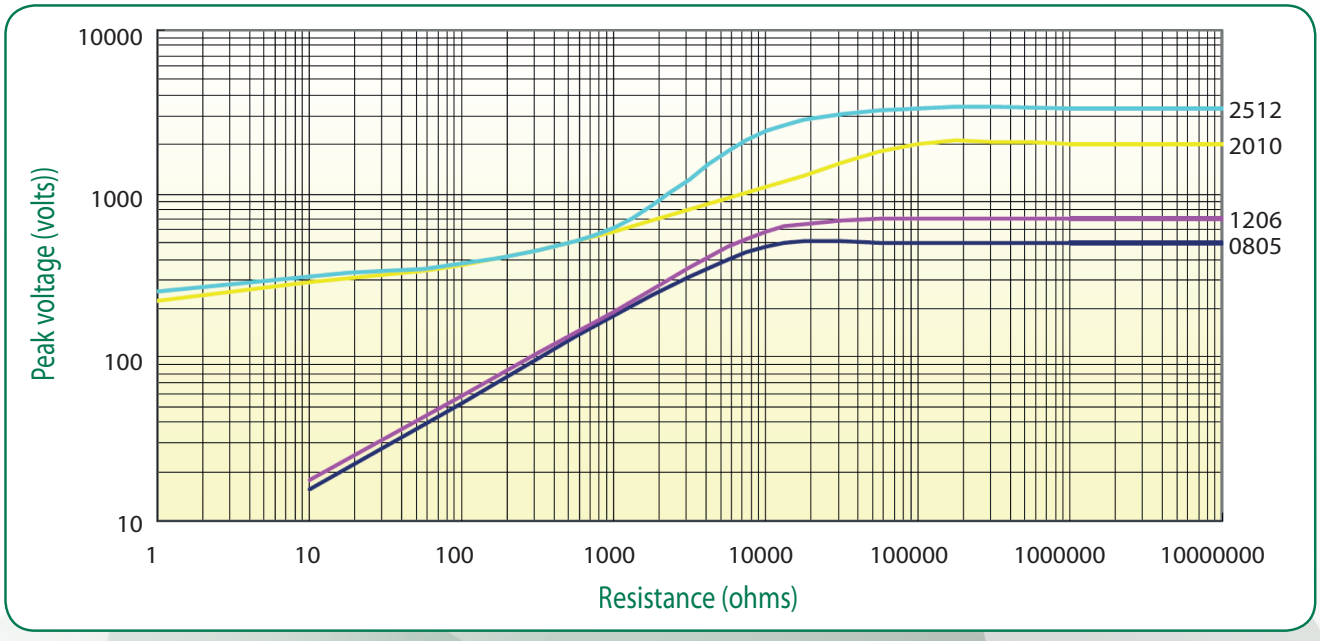

1.2/50 us Lightning Surge

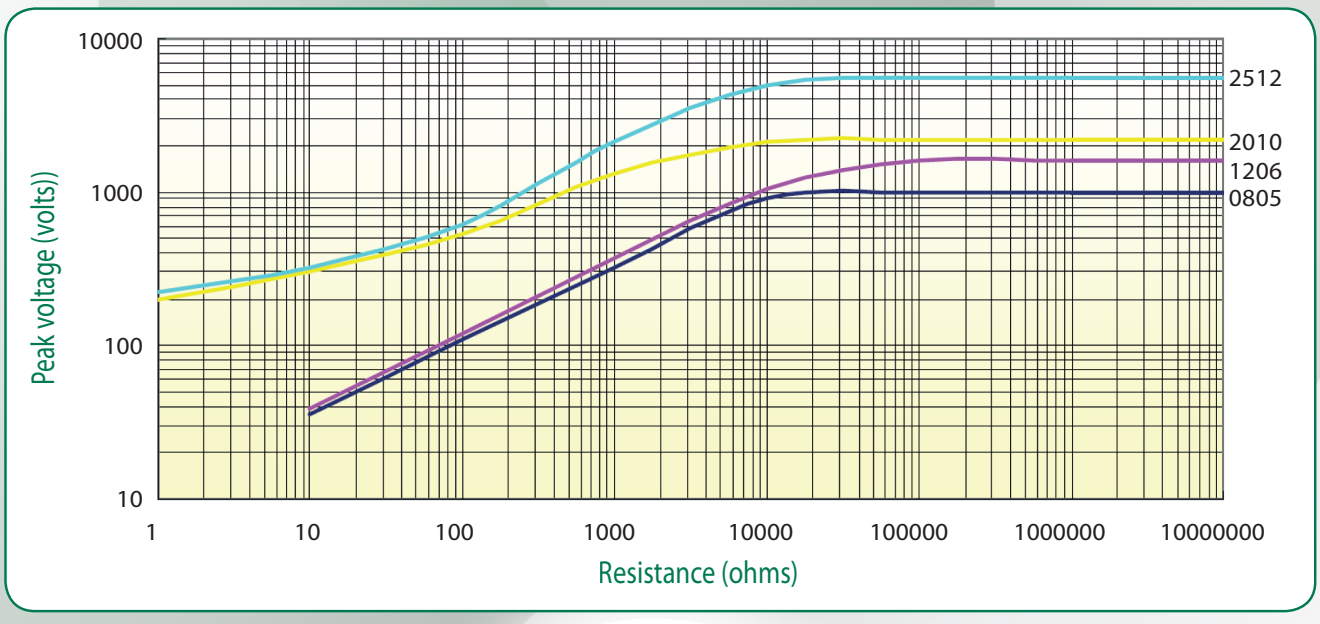

RoHS

PULSE WITHSTAND CAPACITY

The single impulse graph is the result of 50 impulses of rectangular shape applied at one-minute intervals.
The limit of acceptance was a shift in resistance of less than 1% from the initial value.
The power applied was supject to the restrictions of the maximum permissible impulse voltage graph shown.

Single Pulse (100 Ohm)

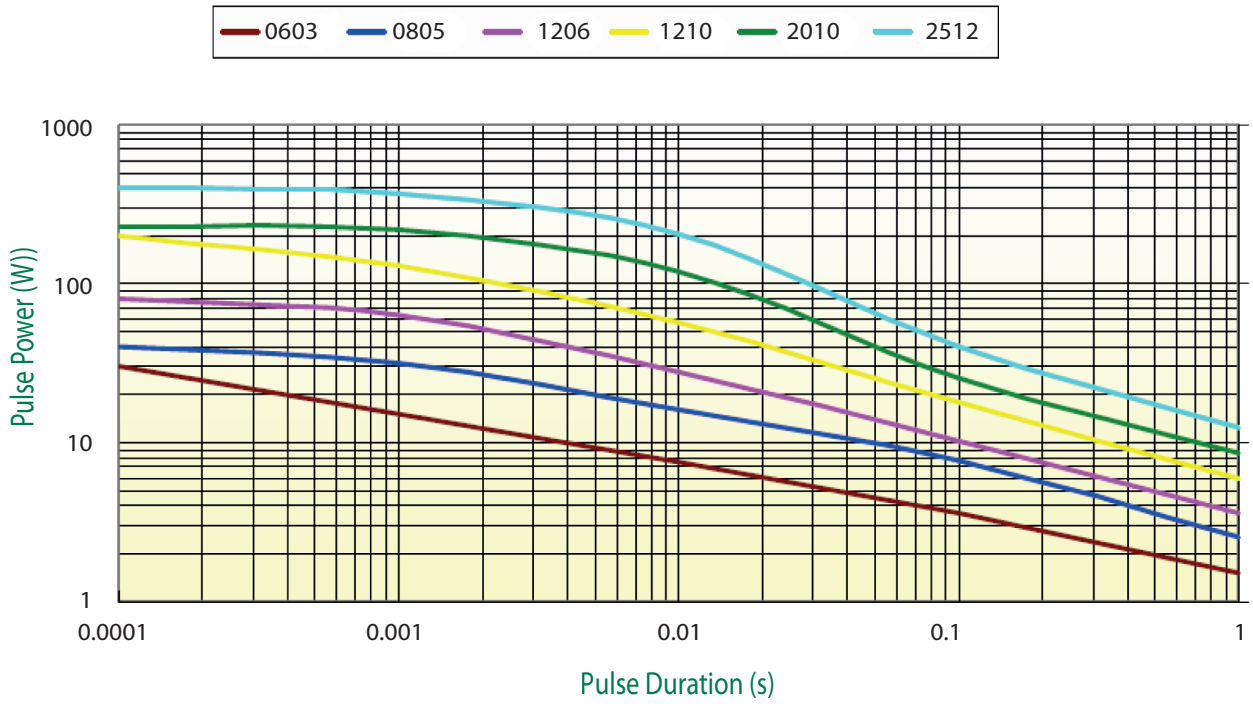

RoHS

CONTINUOUS PULSE

The continuous load graph was obtained by applying repetitive rectangular pulses where the pulse period was adjusted so that the average power dissipated in the resistor was equal to its rated power at 70°C.
Again the limit of acceptance was a shift in resistance of less than 1% from the initial value.

Continuous Pulse (100 Ohm)

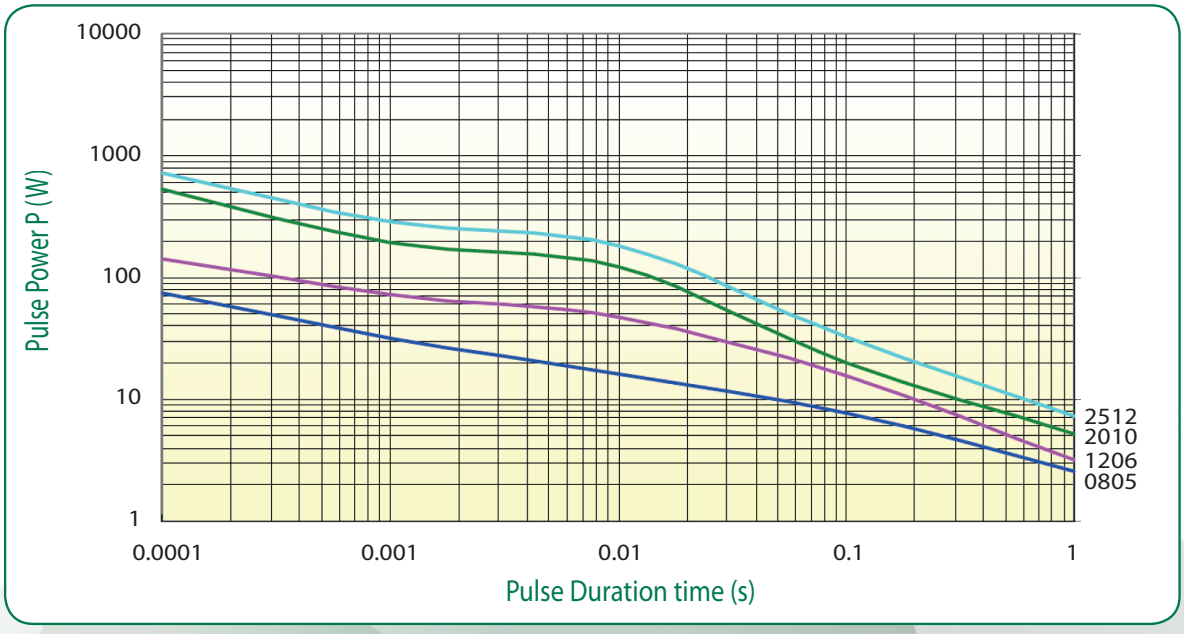

Pulse Voltage (100 ohm)

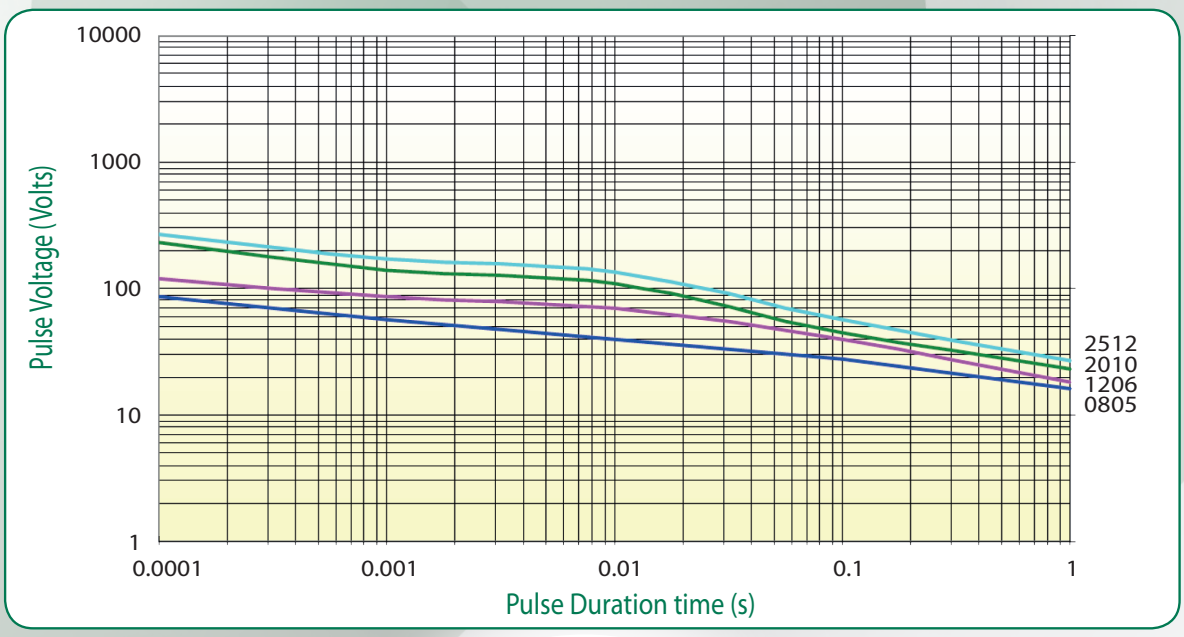

RoHS

PART NUMBER

PWR	25	10K	J	E	1W
Type	Size	Value	Tolerance	TCR (PPM/°C)	Power rating
	03 : 0603		F : ±1%	E : ±100%	1/10W
	05 : 0805		J : ±5%	F : ±200%	1/8W
	06 : 1206				1/5W
	10 : 1210				1/4W
	20 : 2010				1/3W
	25 : 2512				1/2W
					3/4W
					1W
					1.5W